TORTOISE HOUSE

OUTDOOR DOUBLE-WALLED TORTOISE HOUSE

INSTRUCTIONS ITEM# TTO-1

Thank you for purchasing Zoo Med's New Tortoise House. The following instructions will assist you with the assembly of your tortoise's new home. If you have any questions regarding these instructions or the proper use of this item, please contact our customer service department by emailing zoomed@zoomed.com or by calling 805.549.9988.

SETTING UP YOUR TORTOISE HOUSE

**Tortoise House Heater Item# THH-275*

- Please note that the instructions below include general set-up information and proper use. It is very important that you learn about the specific needs of your species to create the most appropriate habitat for your pet.
- For use with 4-12" tortoises that live outdoors. The Tortoise House is designed to provide a retreat from the weather and as a sleeping quarters. It should be used within a secure yard as part of a complete tortoise habitat.
- Use with Zoo Med's Tortoise House Heater* (Item# THH-275) to help maintain warm temperatures on cool nights. Always check to be sure that tortoises have made it inside and that heaters are functioning correctly, especially in low temperatures.
- Place the house where tortoises have easy access. Placing your tortoise inside the house with the ramp door open can allow the animal to explore and acclimate. Bring your tortoise to the ramp and entice them to go inside at dusk for several days in a row to teach them where the house is.
- Cleaning: sweep or scoop out waste or substrate. House can be washed out with water and/ or a cleaner such as Wipe Out 1 Terrarium Cleaner.

PRECAUTIONS:

- Be sure that tortoises always have access to a source of fresh clean water.
- Provide plenty of shady areas within your tortoise's habitat.
- Always monitor house and outdoor temperatures. Use Zoo Med's Min/ Max Thermometer (Item# TH-32) to track high and low temperatures throughout the day and night. Add supplemental heat as necessary to maintain optimal temperatures for your species.
- If extreme weather persists, animals may need to be brought indoors or to a more climate controlled area. (Example: Below 40° F or above 95° F. Be sure to consider species specific requirements.)
- Always monitor animal health and adjust husbandry as needed.
- **NEVER** leave a tortoise locked in the Tortoise House on warm/sunny days. Be sure to also open the vent and increase fresh airflow to help regulate the temperature.

Scan for more info & complete instructions

HARDWARE & SMALL PARTS:

Long Drilling Screws x 27

Small screws x 4 for roof hinges

Ventilation plate x 1
Small screws x 4

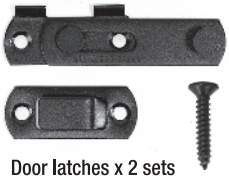

Door latches x 2 sets
Small screws x 8

Hydraulic roof support x 2
Round-head screws x 10

Post caps x 4

Door long hinge x 1
Small screws x 14

LARGE PARTS (HOUSE PANELS):

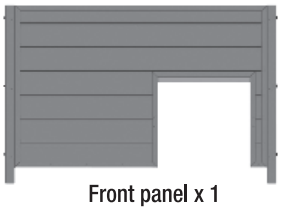

Front panel x 1

Door/ramp panel x 1

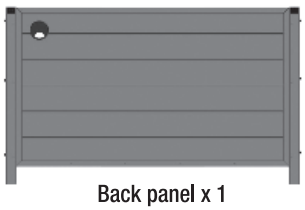

Back panel x 1

Left panel x 1

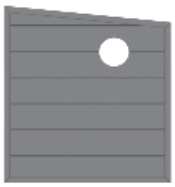

Right panel x 1

Roof panel x 1

Floor panel x 1

ZOO MED LABORATORIES, INC. - 3650 Sacramento Dr. - San Luis Obispo, CA 93401- Phone: 805-542-9988 - Email: zoomed@zoomed.com **zoomed.com**

TORTOISE HOUSE

OUTDOOR DOUBLE-WALLED TORTOISE HOUSE

INSTRUCTIONS ITEM# TTO-1

ASSEMBLY INSTRUCTIONS:

Please read all instructions prior to assembly. You will need a power drill with a Phillip's head screwdriver to complete the assembly.

1.

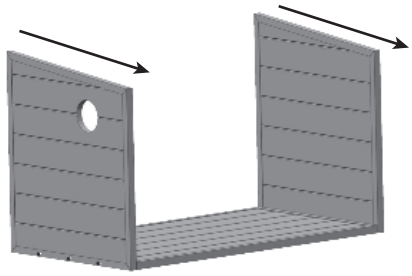

Attach the right and left panels to the floor panel with 6 long drilling screws. NOTE: The right and left panels should be angled in the same direction.

2.

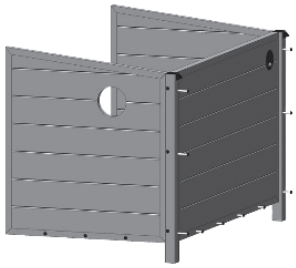

Attach the back panel by aligning it with the left, right, and floor panels using 10 long drilling screws.

3.

Attach the front panel by aligning it with the left, right, and floor panels using 10 long drilling screws.

4.

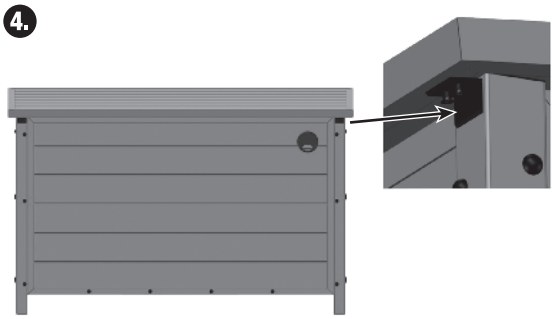

Install the roof panel by attaching hinges to the right and left sides using 8 small screws.

5.

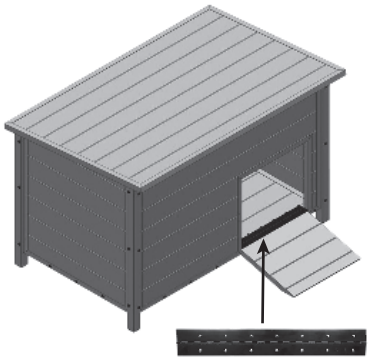

Install the ramp/door by attaching the long hinge to the door, then to the floor panel using 14 small screws.

6.

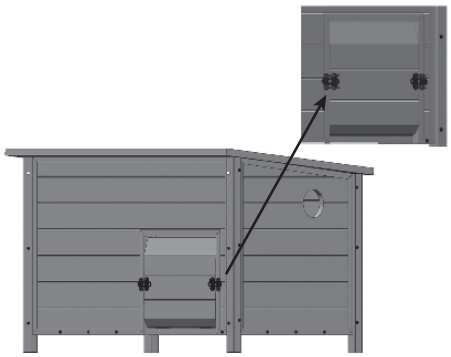

Install the door latches on the left and right sides of the door opening with 8 small screws

7.

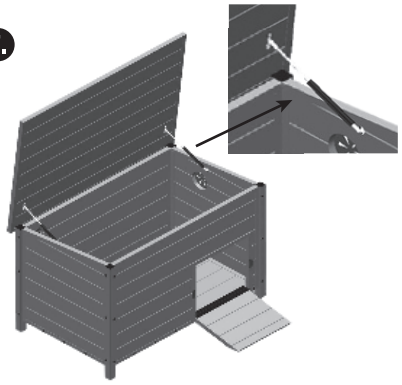

Install the hydraulic roof supports by attaching them to the inside left and right panels then to the roof panel using 10 round-head screws.

8.

Install the adjustable vent to the right outside panel using 4 small screws.

9.

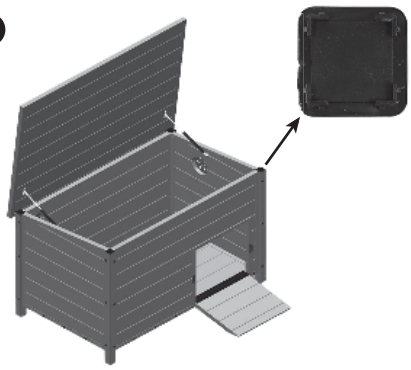

Snap caps into the corner posts.

WARRANTY:

Zoo Med Laboratories, Inc. (Zoo Med) warrants this product to be free of defects in material and workmanship under normal use and service for one year from the date of purchase. The obligation under this warranty is limited to the repair or replacement, at Zoo Med's discretion, of the product or any part thereof, when the product is returned to Zoo Med, freight prepaid. No claim shall be allowed under this warranty if, in the opinion of Zoo Med, this product has been subject to accident or improper usage, including but not limited to: water damage, improper storage, accidental dropping, etc. This warranty is in lieu of all other warranties and representations express or implied. Please include your receipt, full name, address, phone number, and email address along with a note explaining failure when sending any product back to Zoo Med. Please allow 4 to 6 weeks for repair or replacement.

ZOO MED LABORATORIES, INC. - 3650 Sacramento Dr. - San Luis Obispo, CA 93401- Phone: 805-542-9988 - Email: zoomed@zoomed.com **zoomed.com**